CANOPIA®
by PALRAM

HOW TO ASSEMBLE

SCREEN DOOR KIT

Compatible with Palram - Canopia's San Remo, Garda & Ledro

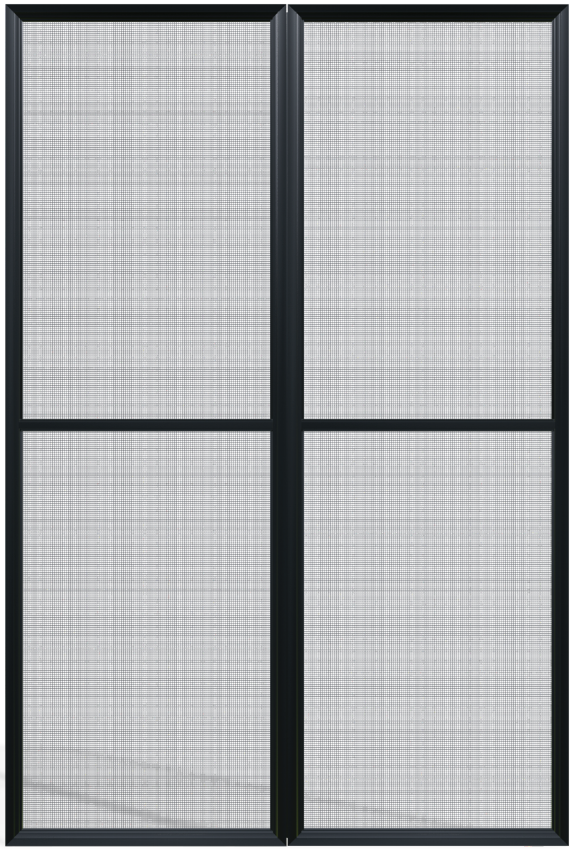

IMPORTANT!

Please read these instructions carefully before starting assembly.
Keep these instructions in a safe place for future reference.

www.canopia.com

PALRAM A member of Palram Industries ltd.

RECYCLE OHSMS ISO 45001 CERTIFIED QMS ISO 9001 CERTIFIED EMS ISO 14001 CERTIFIED

84447_21.07_MV_1.2

1 PARTS REQUEST

In the case of missing or damaged parts, do not return product to store.

Go to the link below or scan the QR code for help, it will direct you to a form that will help us assist you as soon as possible.

SCAN ME

Contact us on our website:
bit.ly/3js7yZi

2 ASSEMBLY ASSISTANCE

If you need any technical assistance in assembling your product, go to the link below or scan the QR code for help.
It will direct you to a form that will help us assist you as soon as possible.

SCAN ME

Contact us on our website:
bit.ly/3kqqFEc

SCAN ME

WE ARE HERE TO HELP

For general questions: bit.ly/3kY07dP

USA

877-627-8476

hobbyservice@poly-tex.com

CANADA

905-5646007

sales@footprintproducts.com

UNITED KINGDOM · IRELAND

01302-380775

customer.serviceUK@palram.com

GERMANY

0180-522-8778

customer.serviceDE@palram.com

FRANCE · BELGIUM

+33-169-791-094

customer.serviceFR@palram.com

ISRAEL

04-848-6816

info.il@palram.co.il

ITALY • NETHERLANDS • PORTUGAL • SPAIN

+33-169-791-094

customer.serviceFR@palram.com

AUSTRIA · LUXEMBURG · LIECHTENSTEIN

+49-180-522-8778

customer.serviceDE@palram.com

AUSTRALIA

03-9219-4444

salesvic@palram.com

NORWAY • SWEDEN • ARGENTINA • GREECE • GREENLAND • ICELAND • ESTONIA • JAPAN • LATVIA • LITHUANIA MAURITIUS • MEXICO • ROMANIA • RUSSIA • TURKEY • UZBEKISTAN • UKRAINE • SWAZILAND • KOREA

+972-4-848-6816

customer.service@palram.com

82642

SCAN ME

WE ARE HERE TO HELP

For general questions: bit.ly/3kY07dP

AUSTRALIA - GREENHOUSES

03-9544-6-999

info@mazedistribution.com.au

HUNGARY · SLOVAKIA

+420-493-523-523

servis@garland.cz

NEW ZEALAND

0800 800 880

customer.service@palram.com

DENMARK

07-575 42 70

post@nshnordic.com

SOUTH AFRICA

011-397-7771

receptionza@palram.com

CROATIA · SLOVENIA

0599-37-057

info@ms-viscom.com

CZECH REPUBLIC

0493-523-523

servis@garland.cz

FINLAND

Neuvonta: 09-6866720
Tuki / Varaosat: 050-3715350

www.horisontenterprises.fi
tuki@horisontenterprises.fi

POLAND

Infolinia: 801-011-929
22-349-93-36

kontakt@ogrodosfera.pl

CYPRUS

0224-971-13

alpaco@alpacodomica.com
www.alpacodomica.com

SWITZERLAND

062-287-33-77

info@ritter.ch

FOR VERANDA / SUN REMO / GARDA

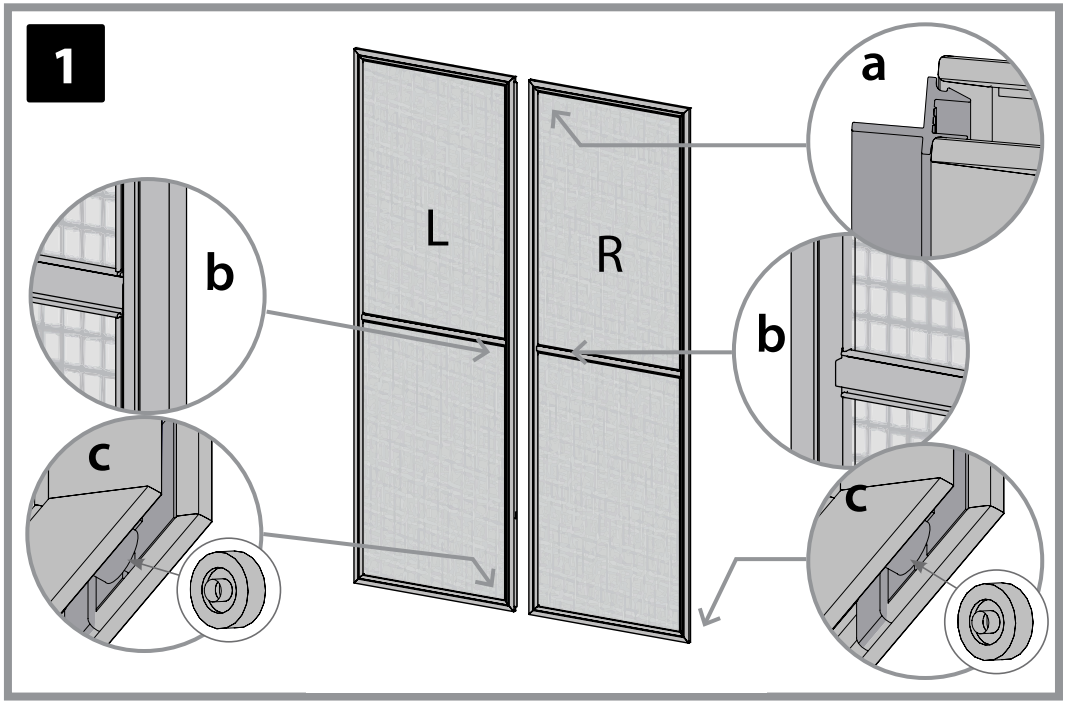

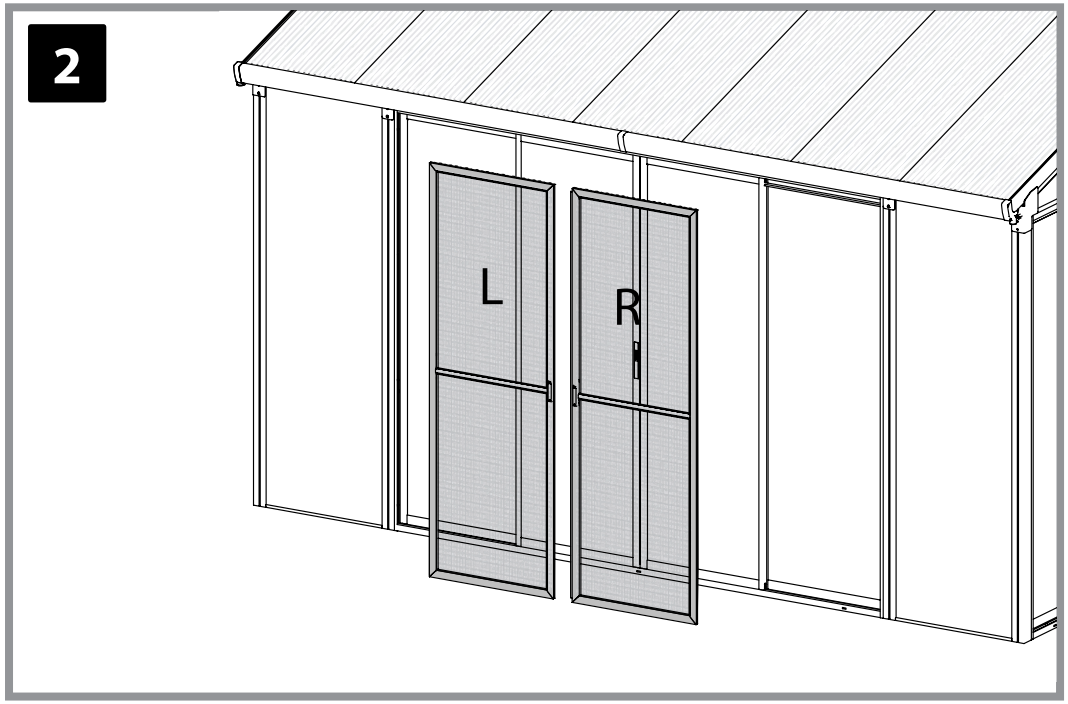

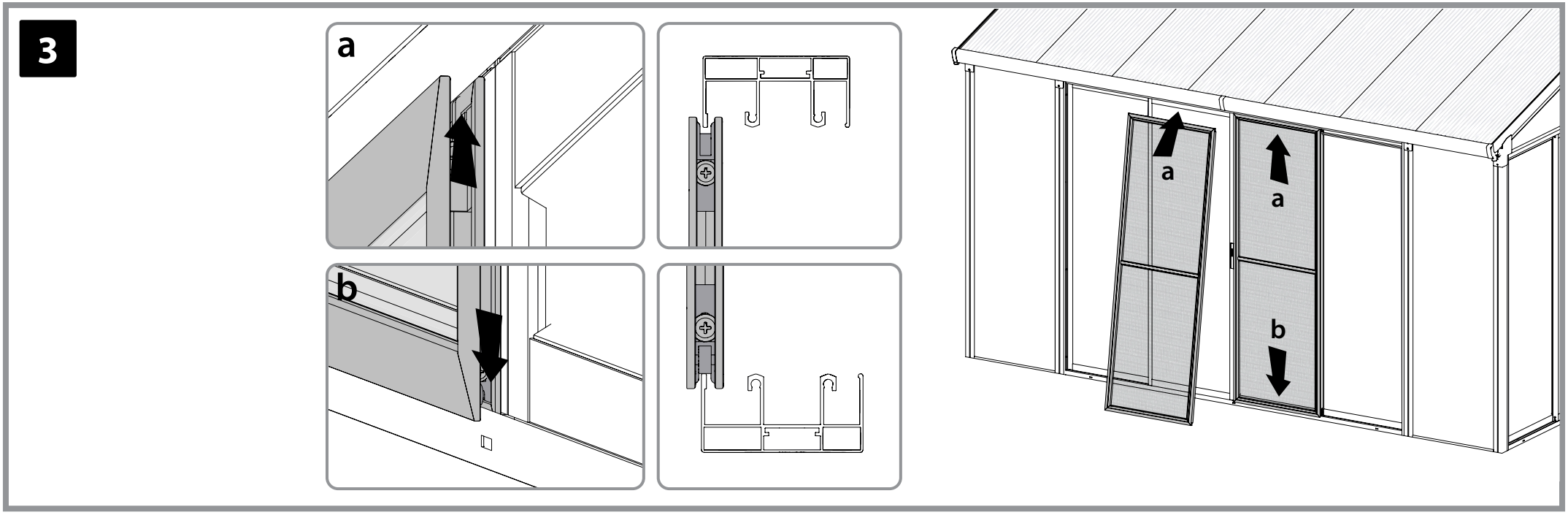

master_Veranda+ledro_NETdoors_V1-2

FOR LEDRO

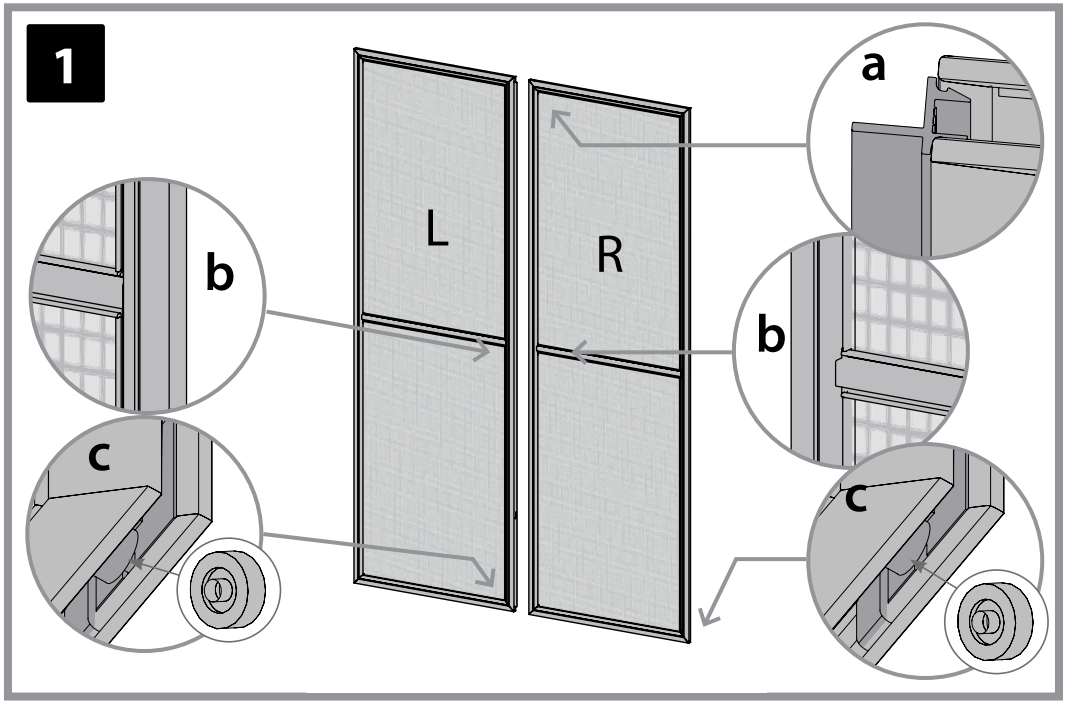

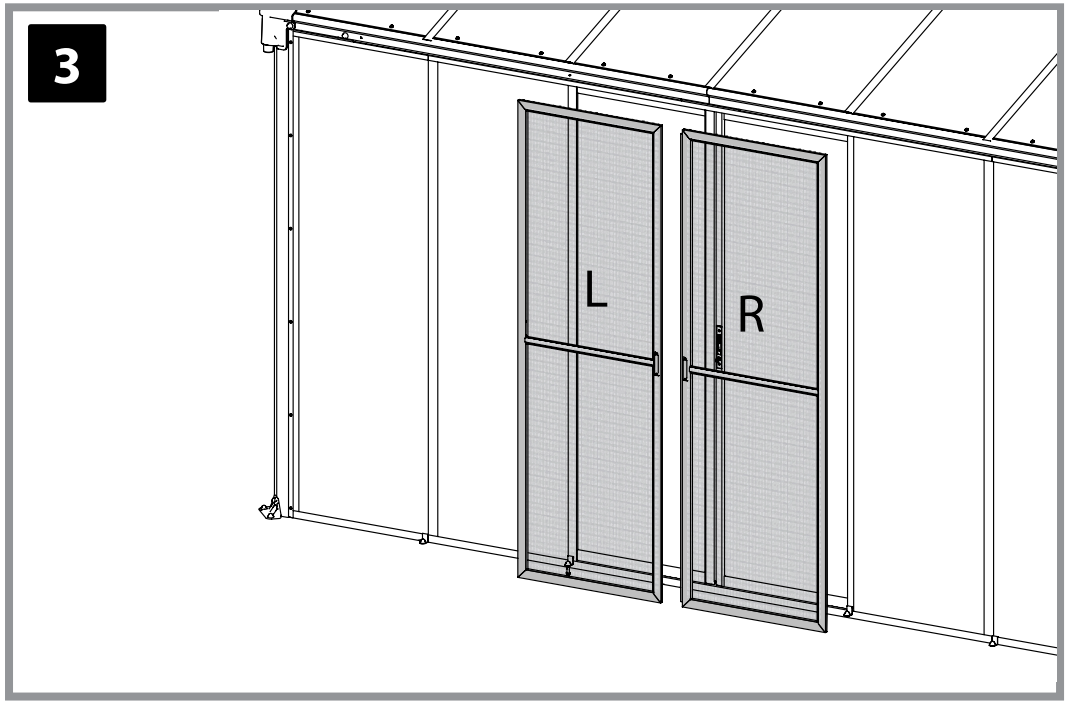

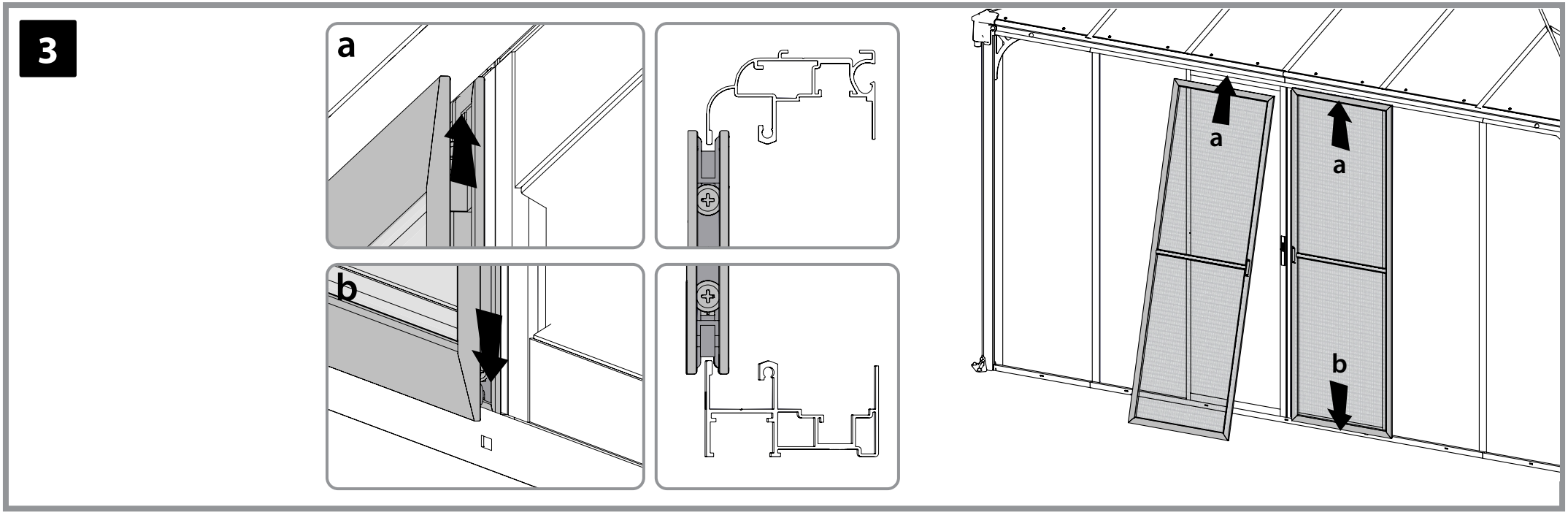

master_Veranda+ledro_NETdoors_V1-2